SPECIFICATION

宏致電子有限公司

桃園縣中壢市東園路13號

No.13, Dongyuan Rd., Jhongli City,

Taoyuan County 320, Taiwan (R.O.C.)

TEL: +886-3-463-2808
FAX: +886-3-463-1800

SPEC. NO.: PS-50007-XXXXX-XXX **REVISION:** L

PRODUCT NAME: 0.40mm PITCH BTB SMT S/T D/R CONNECTOR

PRODUCT NO: 50001、50002、50007、50008、50009、50010、50011、50012、51049、51149、51050、 51166 SERIES

PREPARED:	CHECKED:	APPROVED:
Rong, Li Ping	**Lu,jing quan**	**Hsieh,fu yu**
DATE: **2020/04/28**	DATE: **2020/04/28**	DATE: **2020/04/28**

1 REVISION HISTORY 3
2 SCOPE.....4
3 APPLICABLE DOCUMENTS 4
4 REQUIREMENTS 4
5 PERFORMANCE 5
6 INFRARED REFLOW CONDITION.....8
7 CONNECTOR USAGE.....9
8 PRODUCT QUALIFICATION AND TEST SEQUENCE.....10

1 Revision History

Rev.	ECN #	Revision Description	Prepared	Date
O	ECN-0812036	NEW SPEC	EVEN	2008/12/06
A	ECN-1105455	ADD "CONNECTOR USAGE"	XHX	2011/06/21
B	ECN-1301368	MODIFY TEMPERATURE CONDITION GRAPH	XHX	2013/01/23
C	ECN-1311261	ADD 51049 SERIES	FENGXIAO	2013/11/16
D	ECN-1401255	ADD WORKING VOLTAGE	TANGENHUI	2014/01/18
E	ECN-1406287	ADD SERIES ON PRODUCT NO:	LLJ	2014/07/21
F	ECN-1410221	ADD 51050 SERIES	GUKEQING	2014/10/21
G	ECN-1603412	Mating / Unmating Forces 22~40 | 2 | 1 | 0.4 | 0.3 ↓ 22~40 | 2 | 1.6 | 0.3 | 0.15	LLJ	2016/03/29
H	ECN-1609264	FOR APP1050264 ADD 51149 SERIES	LLJ	2016/09/20
J	ECN-1710046	FOR APP1060417 ADD 51166 SERIES	Liang,lin ji	2017/10/10
K	ECN-1806329	Modify drawing direction	Huang,Shun Sen	2018/06/25
L	ECN-2004481	Change Operating Temperature : from "-40℃ to +80℃" to "-40℃ to +85℃ "	Rong Li Ping	2020/04/28

2 SCOPE

This specification covers performance, tests and quality requirements for 0.40mm pitch BTB connector. ACES P/N: 50001 Series; 50002 Series; 50007 Series; 50008 Series; 50009 Series; 50010 Series; 50011 Series; 50012 Series;51049 Series; 51149 Series 51050 Series. 51166 Series.

3 APPLICABLE DOCUMENTS

EIA-364: ELECTRONICS INDUSTRIES ASSOCIATION

4 REQUIREMENTS

4.1 Design and Construction

4.1.1 Product shall be of design, construction and physical dimensions specified on applicable product drawing.
4.1.2 All materials conform to R.o.H.S. and the standard depends on TQ-WI-140101.

4.2 Materials and Finish

4.2.1 Contact: High performance copper alloy
Finish: (a) Contact Area: Refer to the drawing.
(b) Under plate: Refer to the drawing.
4.2.2 Housing: Thermoplastic High Temp., UL94V-0

4.3 Ratings

4.3.1 Working Voltage Less than 36 Volts AC (per pin)
4.3.2 Voltage: 50 Volts AC (per pin)
4.3.3 Current: 0.5 Amperes (per pin)
4.3.4 Operating Temperature : -40℃ to +85℃

5 Performance

5.1. Test Requirements and Procedures Summary

Item	Requirement	Standard
Examination of Product	Product shall meet requirements of applicable product drawing and specification.	Visual, dimensional and functional per applicable quality inspection plan.
ELECTRICAL		
Item	**Requirement**	**Standard**
Low Level Contact Resistance	55 m Ω Max.(initial)per contact △R 10 m Ω Max.	Mate connectors, measure by dry circuit, 20mV Max., 100mA Max. (EIA-364-23)
Insulation Resistance	500 M Ω Min.	Unmated connectors, apply 500 V DC between adjacent terminals. (EIA-364-21)
Dielectric Withstanding Voltage	No discharge, flashover or breakdown. Current leakage: 1 mA max.	300 VAC Min. at sea level for 1 minute. Test between adjacent contacts of unmated connectors. (EIA-364-20)
Temperature rise	30℃ Max. Change allowed	Mate connector: measure the temperature rise at rated current until temperature stable. The ambient condition is still air at 25℃ (EIA-364-70,METHOD1,CONDITION1)
MECHANICAL		
Item	**Requirement**	**Standard**
Durability	30 cycles.	The sample should be mounted in the tester and fully mated and unmated the number of cycles specified at the rate of 25.4 ± 3mm/min. (EIA-364-09)
Mating / Unmating Forces	Unit: Kg Pins / Mating Force(Max) Initial / Mating Force(Max) Final / Unmating Force(Min) Initial / Unmating Force(Min) Final <20: 2.0 / 1.0 / 0.2 / 0.10 22~40: 2.0 / 1.6 / 0.3 / 0.15 42~80: 5.0 / 4.0 / 0.5 / 0.4 82~120: 5.0 / 4.0 / 0.8 / 0.6 122~200: 8.0 / 6.0 / 0.8 / 0.6	Operation Speed： 25.4 ± 3 mm/minute. Measure the force required to mate/unmate connector. (EIA-364-13)

Terminal / Housing Retention Force	0.2kgf MIN.	Apply axial pull out force at the speed rate of 25.4 ± 3 mm/minute. On the terminal assembled in the housing.
Fitting Nail /Housing Retention Force	0.2kgf MIN.	Apply axial pull out force at the speed rate of 25.4 ± 3 mm/minute. On the fitting nail assembled in the housing.
Vibration	1 µs Max.	The electrical load condition shall be 100 mA maximum for all contacts. Subject to a simple harmonic motion having amplitude of 0.76mm (1.52mm maximum total excursion) in frequency between the limits of 10 and 55 Hz. The entire frequency range, from 10 to 55 Hz and return to 10 Hz, shall be traversed in approximately 1 minute. This motion shall be applied for 2 hours in each of three mutually perpendicular directions. (EIA-364-28 Condition I)
Shock (Mechanical)	1 µs Max.	Subject mated connectors to 50 G's (peak value) half-sine shock pulses of 11 milliseconds duration. Three shocks in each direction shall be applied along the three mutually perpendicular axes of the test specimen (18 shocks). The electrical load condition shall be 100mA maximum for all contacts. (EIA-364-27, test condition A)

ENVIRONMENTAL

Item	Requirement	Standard
Resistance to **Reflow** Soldering Heat	See Product Qualification and Test Sequence Group 9 **(Lead Free)**	Pre Heat：150℃~180℃, 60~120sec. Heat：230℃ Min., 40sec Min. Peak Temp.：260℃Max, 10sec Max. Reflow number cycle: 2 times
Thermal Shock	See Product Qualification and Test Sequence Group 4	Mate module and subject to follow condition for 5 cycles. 1 cycles: -55 +0/-3 ℃, 30 minutes +85+3/-0 ℃, 30 minutes (EIA-364-32, test condition I)

Humidity	See Product Qualification and Test Sequence Group 4	Mated Connector 40℃, 90~95% RH, 96hours (EIA-364-31, Test condition A)
Temperature life	See Product Qualification and Test Sequence Group 5	Subject mated connectors to temperature life at 85℃ for 96 hours. (EIA-364-17, Test condition A)
Salt Spray (Only For Gold Plating)	See Product Qualification and Test Sequence Group 6	Subject mated/unmated connectors to 5% salt-solution concentration, 35℃ (I) Gold flash for 8 hours (II) Gold plating 5 u" for 96 hours. (EIA-364-26)
Solder ability	Tin plating: Solder able area shall have minimum of 95% solder coverage. Gold plating: Solder able area shall have minimum of 75% solder coverage	And then into solder bath, Temperature at 245 ±5℃, for 4-5 sec. (EIA-364-52)
Hand Soldering Temperature Resistance	Appearance: No damage	T≧350℃, 3sec least

Note. Flowing Mixed Gas shell be conduct by customer request.

6 INFRARED REFLOW CONDITION

6.1 Lead-free Process

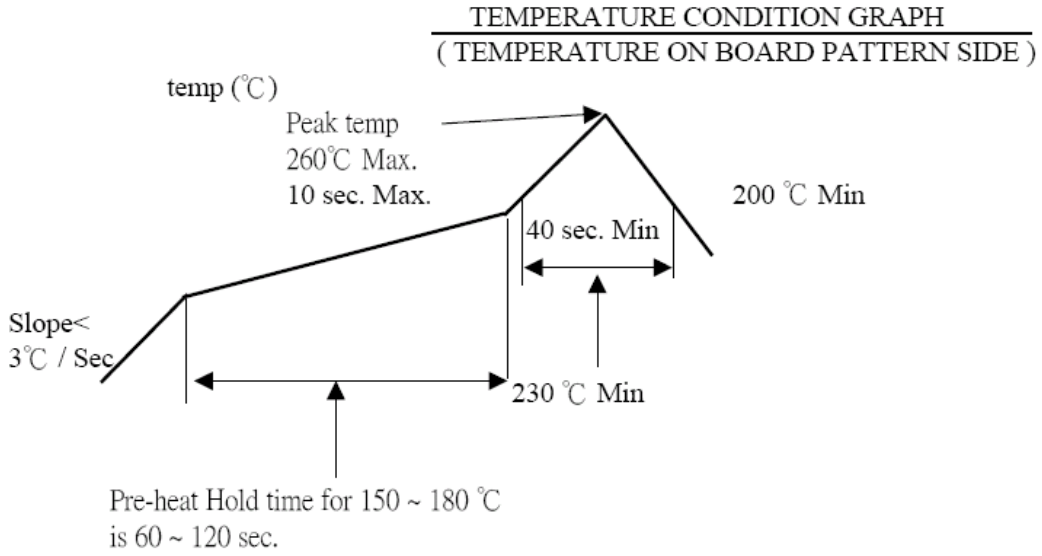

7 CONNECTOR USAGE

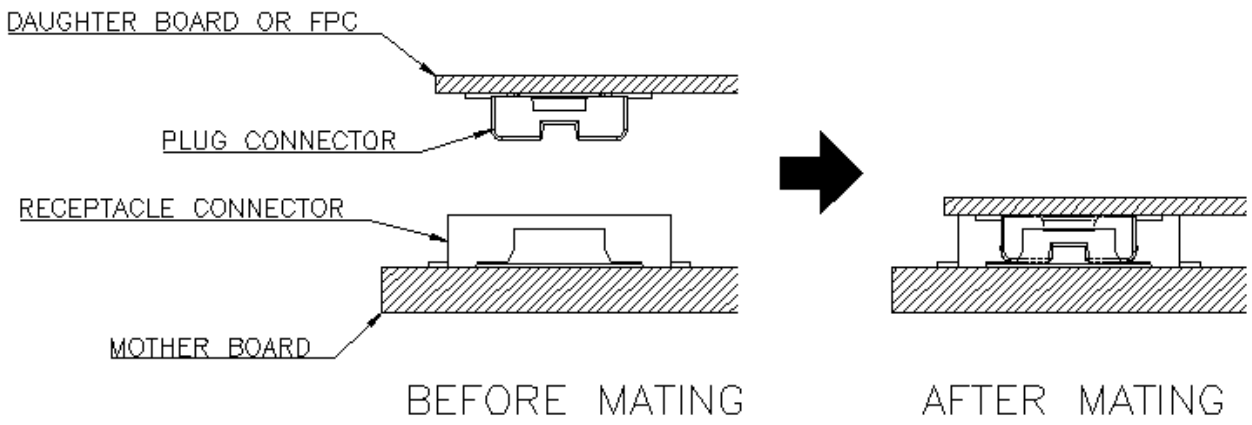

MATING PROCEDURE

Check the mating condition

UNMATING PROCEDURE

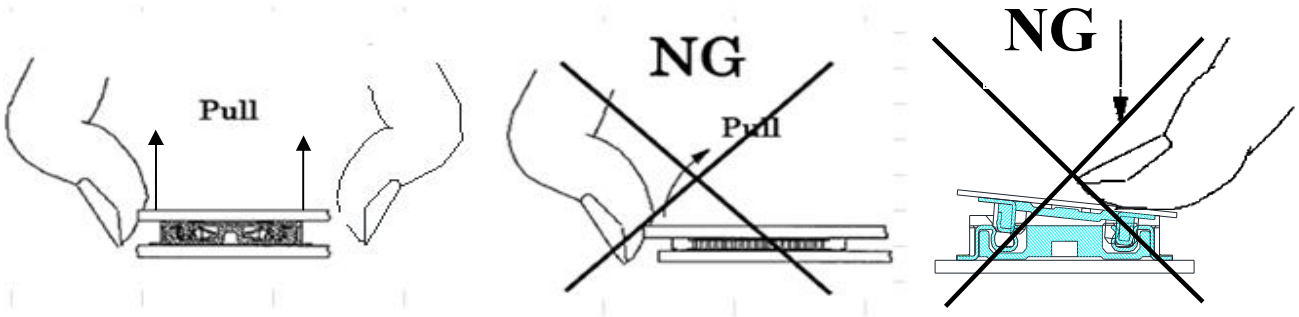

8 PRODUCT QUALIFICATION AND TEST SEQUENCE

Test or Examination	Test Group									
	1	2	3	4	5	6	7	8	9	10
	Test Sequence									
Examination of Product				1、7	1、6	1、4			1	1
Low Level Contact Resistance		1、5	1、4	2、10	2、9	2、5			3	
Insulation Resistance				3、9	3、8					
Dielectric Withstanding Voltage				4、8	4、7					
Mating / Unmating Forces		2、4								
Temperature rise	1									
Durability		3								
Vibration			2							
Shock (Mechanical)			3							
Thermal Shock				5						
Humidity				6						
Temperature life					5					
Salt Spray						3				
Solder ability							1			
Terminal / Housing Retention Force								1		
Fitting Nail /Housing Retention Force								2		
Resistance to Soldering Heat									2	
Hand Soldering Temperature Resistance										2
Sample Size	2	4	4	4	4	4	2	4	4	4